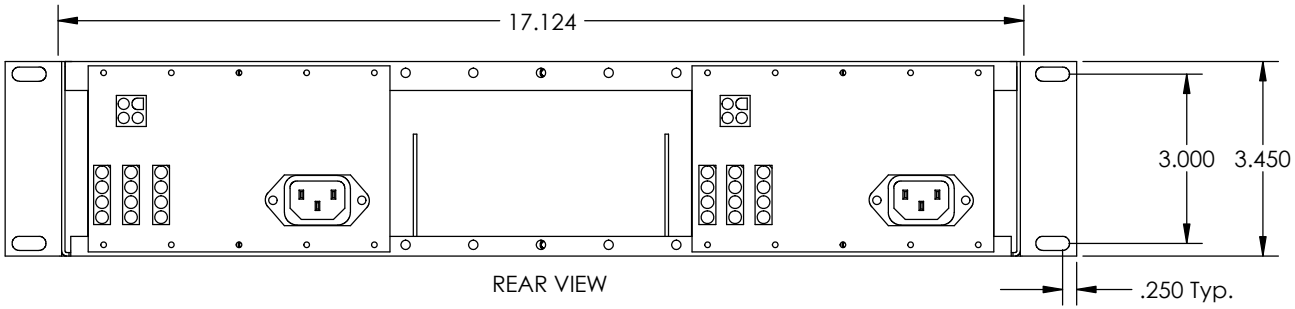

REAR VIEW

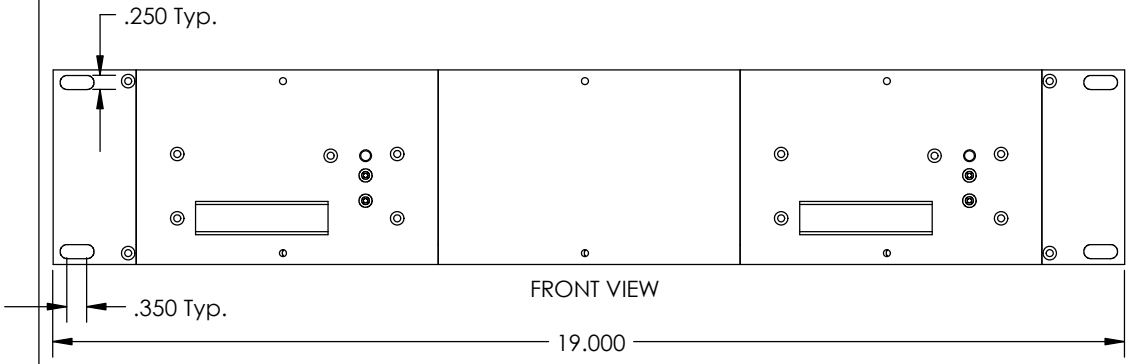

FRONT VIEW

SIDE VIEW

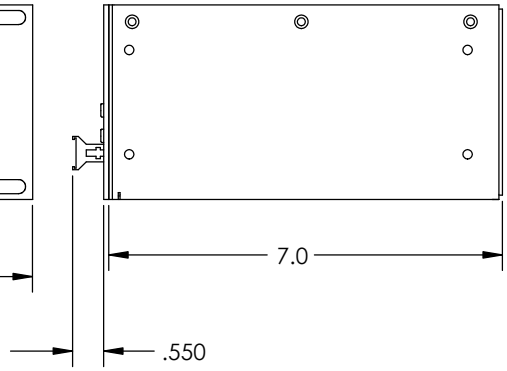

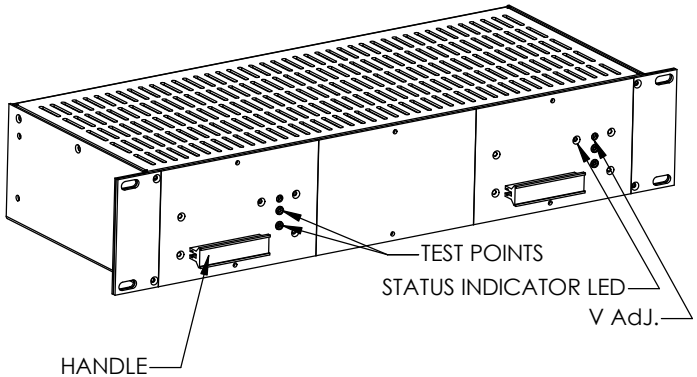

						DIMENSIONS ARE IN INCHES

THIS DOCUMENT IS THE PROPERTY OF ABSOPULSE ELECTRONICS LTD. ITS CONTENTS ARE PROPRIETARY AND MAY NEITHER BE COPIED, REPRODUCED NOR ITS CONTENTS DISCLOSED TO OTHERS WITHOUT PRIOR WRITTEN AGREEMENT FROM ABSOPULSE ELECTRONICS LTD.

Title: OUTLINE DRAWING				ABSOPULSE
Part of: 2 U SHELF WITH TWO PLUG-IN MODULES				Date: SEP.09.03
Checked by:	Approved by:	Revision:		Drawing No: