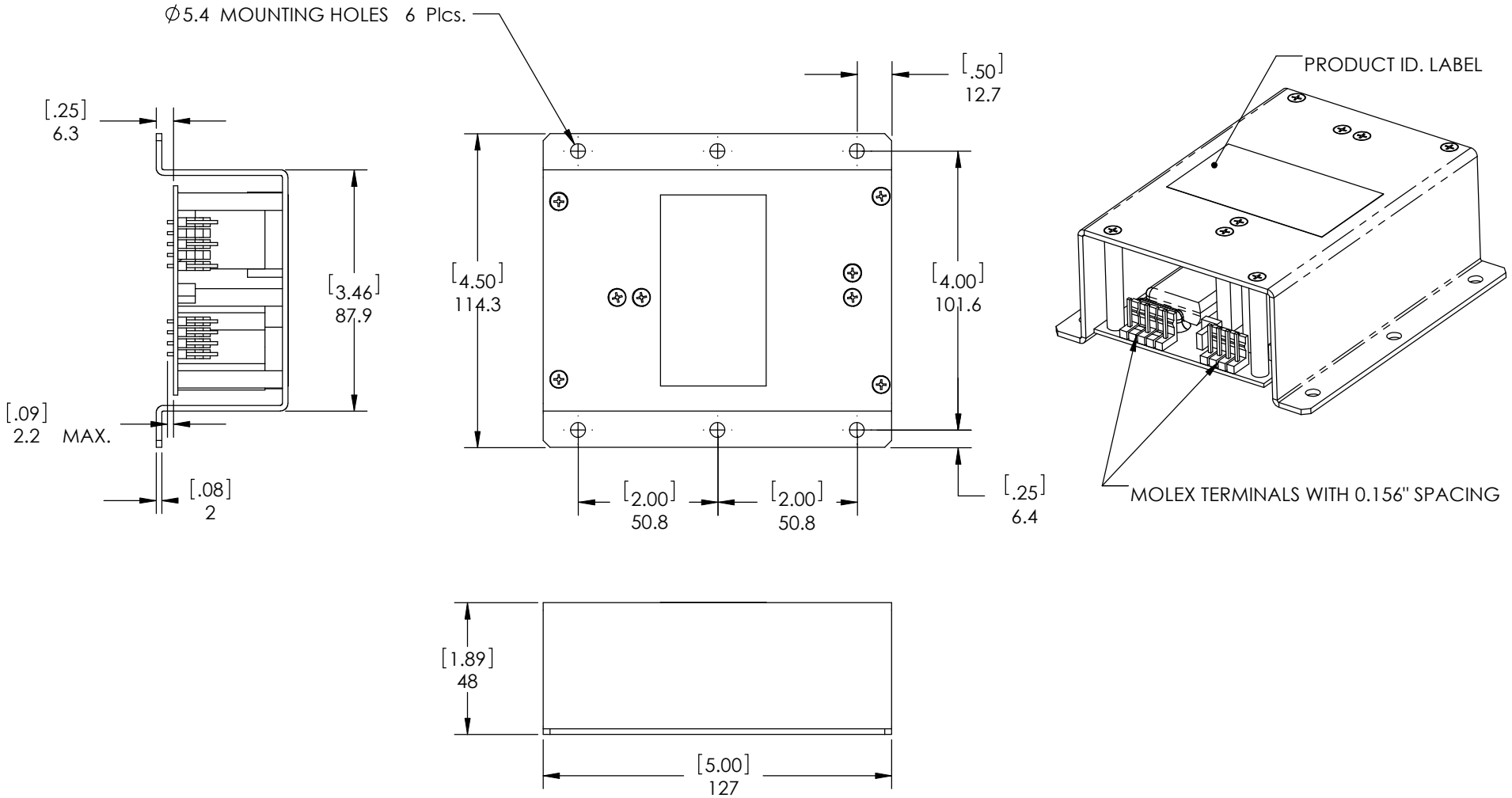

CASE MATERIAL: ALUMINUM 5052-H32
FINISH: CLEAR IRIDITE AS PER MIL-C-5541E CLASS 3

DIMENSIONS ARE IN MILLIMETERS [INCHES] TOLERANCES ON DECIMALS: XXX ± 0.2mm XX ± 0.3mm ANGLES: ± 2° FRACTIONS: ± 0.4mm UNLESS OTHERWISE STATED	THIS DOCUMENT IS THE PROPERTY OF ABSOPULSE ELECTRONICS LTD. ITS CONTENTS ARE PROPRIETARY AND MAY NEITHER BE COPIED, REPRODUCED NOR ITS CONTENTS DISCLOSED TO OTHERS WITHOUT PRIOR WRITTEN AGREEMENT FROM ABSOPULSE ELECTRONICS LTD.	Title: OUTLINE DRAWING	ABSOPULSE
		Model No: FZ PACKAGE	